SLH-233-3

THIRD ANGLE PROJECTION

文管中心
2006.06.15
發行章

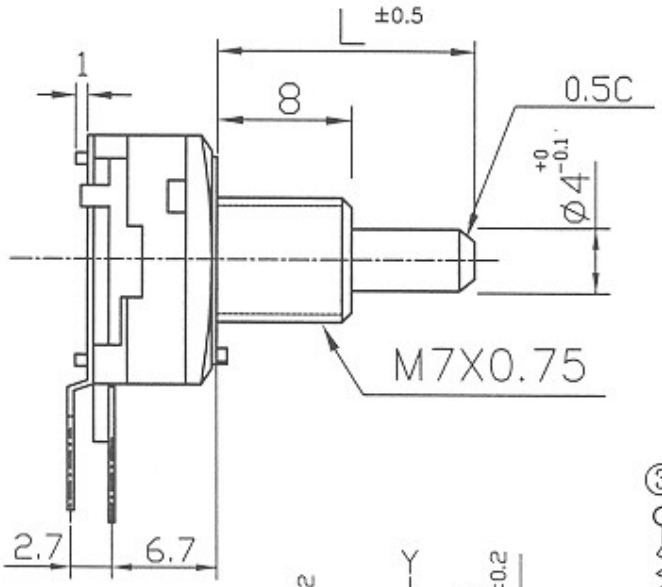

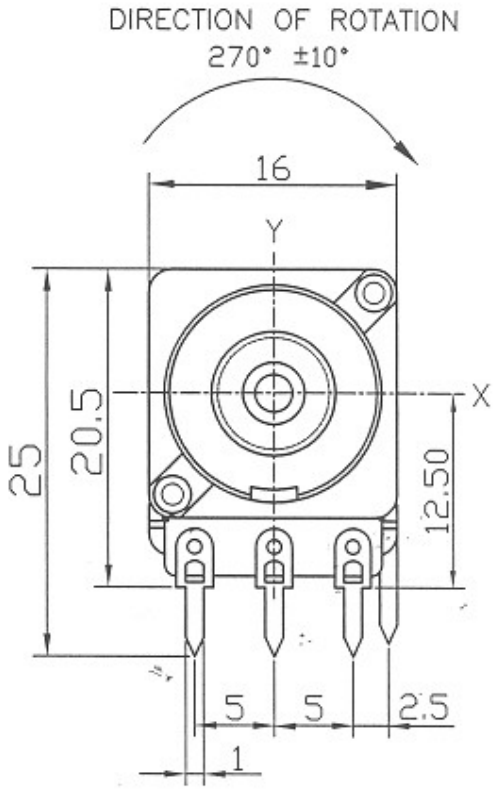

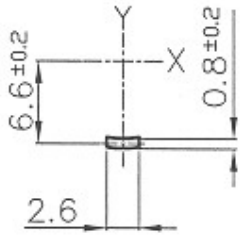

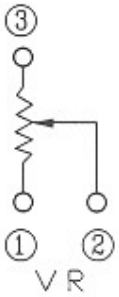

NUMBER CLICK:
41 CLICK

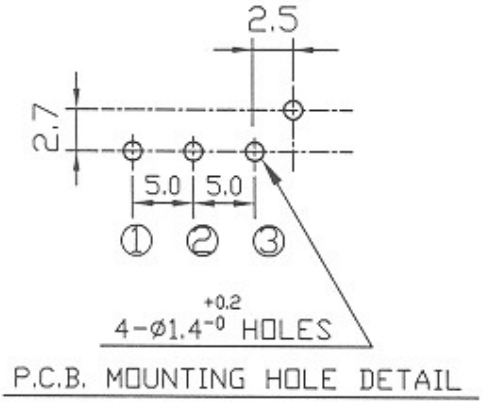

P.C.B. MOUNTING HOLE DETAIL

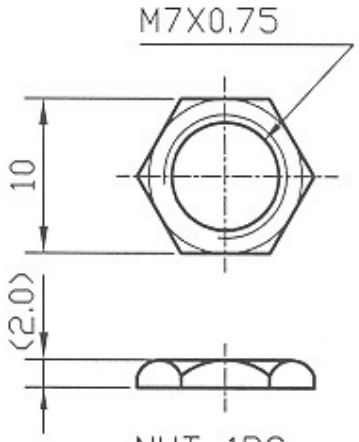

NUT 1PC

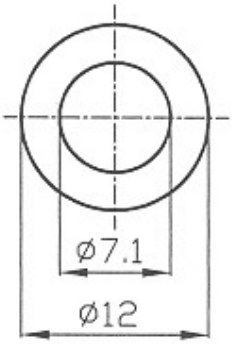

WASHER 1PC

NOTE: 1. TOLERANCES UNLESS OTHERWISE SPECIFIED: ±0.4mm
2. ACCESSORY PARTS: Ø7 HEXAGON NUT ONE PIECE & WASHER ONE PIECE

				RD1601F-20B4- R6- -6 2
No.	DATE	DESCRIPTION	PART No.	NAME

TOL.UNILESS OTHERWISE STATED	DIMENSION	SCALE	DRAWN BY	CHECKED BY	APPROVED BY	DRAWING No.
less than 10 ±0.3 above 10~30 ±0.5 above 30~100 ±1.0 above ±5°	mm		93.11.18 立文		93.11.18 茂松	

TAIWAN ALPHA ELECTRONIC CO., LTD.